Indonesian Journal of Data and Science

Volume 6 Issue 3
ISSN 2715-9930
https://doi.org/10.56705/ijodas.v6i3.324

Research Article

Smart Waste Bin Prototype for University Waste Management

Fauzy Fathrurahman [1,*], Dolly Indra [2], Tasrif Hasanuddin [3], Herdianti Darwis [4], Tanaka Kazuaki [5]
[1] Universitas Muslim Indonesia, Makassar, Indonesia, 13020210030@umi.ac.id
[2] Universitas Muslim Indonesia, Makassar, Indonesia, dolly.indra@umi.ac.id
[3] Universitas Muslim Indonesia, Makassar, Indonesia, tasrif.hasanuddin@umi.ac.id
[4] Universitas Muslim Indonesia, Makassar, Indonesia, herdianti.darwis@umi.ac.id
[5] Kyushu Institute of Technology, Iizuka, Japan, kazuaki@ics.kyutech.ac.jp

Correspondence should be addressed to Fauzy Fathrurahman; 13020210030@umi.ac.id

Received 02 September 2025; Accepted 28 October 2025; Published 31 December 2025

Abstract:
Background: Waste mismanagement remains a critical issue in Indonesian campuses, where ineffective segregation and collection practices contribute to environmental pollution. Smart technologies offer opportunities to improve waste handling efficiency and monitoring in university environments. **Methods**: This study developed a smart waste bin prototype that integrates Internet of Things (IoT) sensors, machine learning–based image classification (MobileNetV2 with TensorFlow Lite), GPS tracking, and LoRa communication. The system was designed to classify three types of waste—plastic bottles, snack packaging, and cans—while enabling fill-level monitoring, automated sorting, and real-time location reporting. **Results**: Experimental results showed strong classification accuracy for plastic bottles (100%), but lower performance for snack packaging (53–80%) and cans (40–67%), especially in low-light conditions or with darker materials. The overall real-time testing accuracy reached 45.1%. LoRa communication provided long-range connectivity but was affected by electromagnetic interference, while GPS tracking was reliable in open areas but inconsistent indoors. **Conclusions**: The prototype demonstrates the feasibility of integrating AI and IoT for scalable campus waste management. Despite environmental and hardware limitations, it offers a modular framework that can be refined with improved lighting, EMI shielding, and enhanced datasets. This research contributes a practical model for smart campus initiatives and supports the adoption of sustainable waste management practices in higher education environments.

Keywords: Smart Waste Bin, Machine Learning, LoRa Communication, Waste -Classification, Internet of Things, Automated-Segregation, GPS.

1. Introduction

Waste mismanagement remains a pressing environmental challenge in Indonesia, where rapid urbanization, limited infrastructure, and low public awareness have contributed to approximately 4.8 million tons of mismanaged plastic waste annually, with more than 620,000 tons entering the ocean [1], [2], [3], [4]. Studies of community waste composition, such as those conducted in Pasaran Island, show that organic waste constitutes 44% of the total, followed closely by plastics at 26% [5]. This imbalance highlights the urgent need for effective segregation and treatment strategies. The consequences of ineffective waste management are severe: the 2005 Leuwigajah landfill avalanche claimed 150 lives [6], while informal waste pickers, predominantly women, continue to face daily health risks from hazardous exposure [7].

Recent advances in the Internet of Things (IoT) and Artificial Intelligence (AI) provide new opportunities for addressing such urban challenges [8], [9], [10]. In the domain of sanitation, IoT-enabled systems and smart sensors have demonstrated potential for real-time monitoring, automation, and improved efficiency in waste handling. Previous research has explored diverse smart waste bin prototypes incorporating Wi-Fi and Zigbee [11], Long-Range Low-Power (LoRa) networks [12], [13], motion and gas sensors, and even advanced segregation techniques using machine learning [14], [15]. While these approaches validate the feasibility of smart bins, most remain limited in

scope—focusing on isolated functions such as fill-level detection, lid automation, or basic classification. Many also rely on short-range connectivity that restricts scalability [11], or omit real-time geolocation features that could optimize waste collection routes across large, distributed areas [12], [13].

Despite these advances, few existing systems combine robust long-range communication, machine learning–based waste classification, real-time location tracking, and automated segregation into a single, modular prototype. This study addresses this gap by integrating IoT sensors, a MobileNetV2-based image classification module, GPS tracking, and LoRa communication into a unified smart waste bin prototype. In addition to classification and sorting, the system transmits bin status and location data in real time, supporting scalable deployment across campus environments. Definitions of smart device architectures [16] and recent applications of deep learning in waste classification [17] further underpin the novelty of this approach, which moves beyond fragmented systems toward a comprehensive smart waste management solution.

The objectives of this research are to:

1. Develop a smart waste bin prototype capable of automated classification and segregation of common campus waste.
2. Integrate IoT sensors, GPS tracking, LoRa communication, and MobileNetV2-based image recognition for real-time monitoring and reporting.
3. Evaluate the prototype's performance under real-world campus conditions, including classification accuracy, communication reliability, and system stability.

By addressing these objectives, the study contributes to Sustainable Development Goal (SDG) 11: Sustainable Cities and Communities and SDG 12: Responsible Consumption and Production. It not only supports cleaner and more efficient waste management but also demonstrates educational and practical value by offering a real-world platform for students and researchers to explore IoT- and AI-driven sustainability innovations.

2. Method

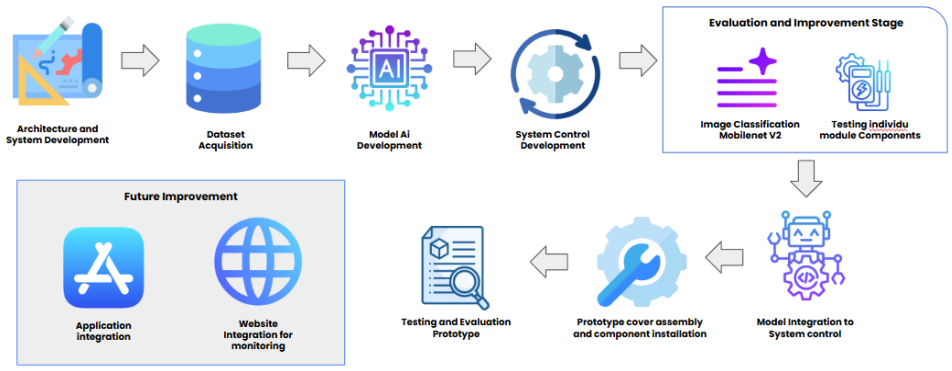

Figure 1. Research Design

The development of the smart waste bin prototype followed a structured methodology encompassing dataset preparation, AI model training, system integration, and field testing. Each stage was designed to ensure the functional integrity, scalability, and feasibility of the proposed system. The overall research design process is illustrated in **Figure 1**, which presents the flow of development and evaluation stages.

AI Model

This phase will prepare the necessary components for the smart bin's segregation capability, with a focus on integrating pre-trained or readily available AI models for waste classification. The deep technical aspects of AI model training will be acknowledged but not extensively detailed within the core IoT development.

a. Dataset Acquisition and Augmentation

For this research, to train the classification model, a custom dataset was manually collected to represent waste types commonly found in Indonesian campuses: plastic bottles, snack packaging, and cans. The dataset initially contained 395 images, which was expanded to 1,253 images through augmentation using Roboflow, including rotations, flips, brightness adjustments, and zoom transformations [18] as shown on **Figure 2**. This step mitigated overfitting and improved model robustness. A summary of dataset distribution is shown in **Table 1**.

Table 1. Dataset class type and Total Data

Class	Description	Before Augmentation Roboflow	After Augmentation Roboflow
Plastic Bottle	PET. And HDPE plastic bottle (e.g, water bottles, soda bottles | crumbled, not crumbled)	186	440
Plastic Snack Product	Plastic snack packaging (e.g chip bags, candy wrappers, cookies wrappers| crumbled not crumbled)	164	437
Can	Beverage Aluminium and Tin cans (e.g beverage cans | crumbled not crumbled)	45	349
			Total data: 1253

Figure 2. Dataset accusation for 3 class of waste; (A)Plastic Bottle, (B)Snack Packaging, (C)Canned Product

b. AI Model Training

In this study, three deep learning architectures were implemented for the waste classification task: a custom Convolutional Neural Network (CNN), ResNet-50, and MobileNetV2. These models were selected to represent different levels of depth and complexity, allowing evaluation of their suitability for deployment on an embedded platform. Among them, MobileNetV2 was identified as the most appropriate candidate for the prototype due to its lightweight design, computational efficiency, and prior evidence of strong performance on resource-constrained devices such as the Raspberry Pi [19], [20].

In addition to MobileNetV2, this research initially implemented ResNet-50 and a custom CNN model. However, both exhibited overfitting during training and validation. These findings are consistent with prior studies: [21] noted overfitting tendencies when applying ResNet-50 to plastic waste classification, while [22] reported similar issues in CNN-based waste classification, where accuracy degraded due to limited dataset diversity. In contrast, MobileNetV2 demonstrated a better balance between accuracy, generalization, and computational efficiency, making it the final architecture chosen for deployment.

The model was developed using TensorFlow/Keras with transfer learning from an ImageNet-pretrained backbone. Base layers were frozen to retain general features, while a custom dense classification head was trained to distinguish three classes of waste: plastic bottles, snack packaging, and cans. Compilation used the Adam optimizer (learning rate = 0.0001) with categorical cross-entropy loss [23]. raining was performed on images resized to 224 × 224 pixels [24], using a batch size of 16 for up to 50 epochs.

To improve training stability, several callbacks were employed:

- ModelCheckpoint – to save the best model weights,
- EarlyStopping (patience = 10) – to halt training when validation stopped improving,
- ReduceLROnPlateau (patience = 3) – to adaptively lower learning rate [25].

This configuration ensured MobileNetV2 was optimized for accurate classification while maintaining fast and efficient inference, making it suitable for real-time deployment in the smart waste bin system.

System Development and Integration

This phase involves the development, testing, and integration of all individual hardware components into a cohesive and functional smart waste bin system.

a. Individual Component Purposes and Building

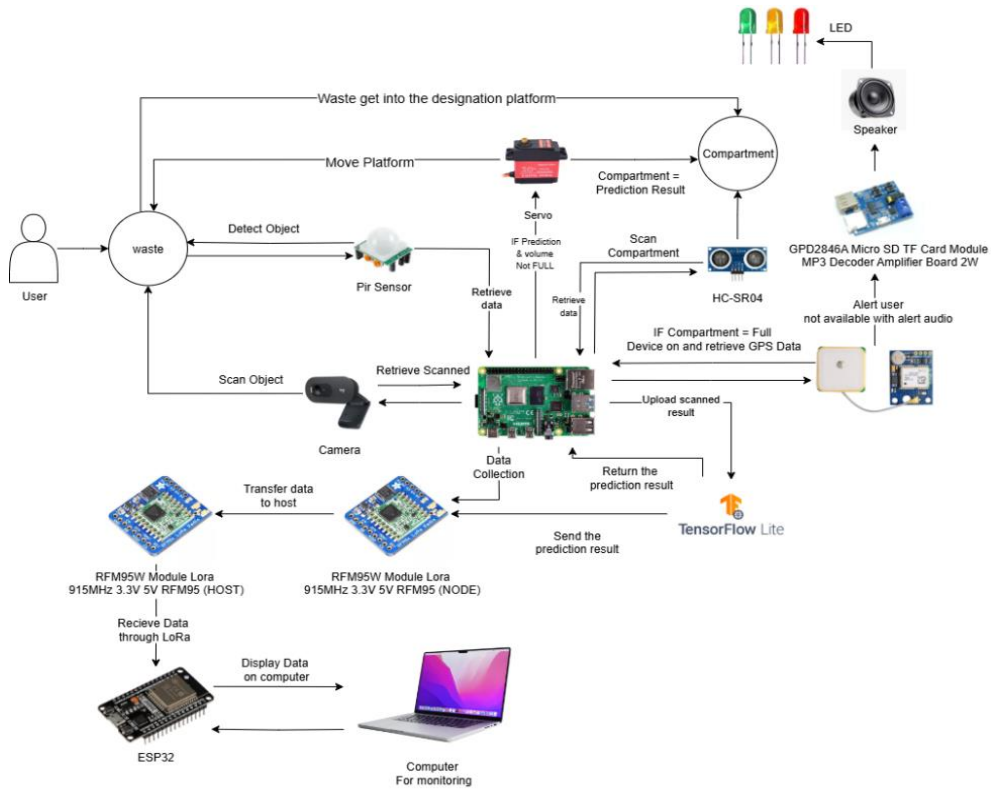

Figure 3. Smart Waste Bin System Architecture Diagram

Before full system assembly, every sensor, communication module, and actuator is rigorously tested both independently and in conjunction with the Raspberry Pi, serving as the central control unit. This systematic approach ensures the proper operation, reliable communication, and seamless interaction of each constituent part, laying a robust foundation for the overall smart waste management system. The overall system architecture and the interaction of its key components are illustrated in **Figure 3**.

The components used in the development of the smart waste bin are as follows:

1) Raspberry Pi 4 Model B as Central Control Unit:

   The Raspberry Pi serves as the central brain of the smart waste bin, responsible for data collection from various sensors, processing information, and executing control commands [26]. It manages the flow of data, receives scanned image results, retrieves GPS data, and sends prediction results, ultimately controlling the segregation process.

2) GPS Module (Real-time Location Tracking): A GPS module (e.g., Neo-6M, though the diagram shows a generic GPS module) is integrated to retrieve real-time geographical position data of the smart waste bin. This information is crucial for waste collectors to track the bin's location and optimize collection routes.

3) HC-SR04 Ultrasonic Sensor (Compartment Fill Level): HC-SR04 Ultrasonic Sensors are employed to scan each compartment and monitor its fill level. If a compartment is detected as full by surpassing threshold detection [27], this information is retrieved by the Raspberry Pi, which then triggers appropriate alerts and actions, preventing further waste from being directed to an overloaded section.

4) Servo Motor (Platform Movement & Segregation): A Servo Motor is integrated to control the "designation platform" and facilitate waste segregation. After an object is detected and scanned, the servo moves the platform to guide the waste towards the correct compartment based on the prediction result from the AI model.

5) Camera (Object Scanning): A Camera module is utilized to scan the waste object once detected. The captured image data is then sent to the Raspberry Pi for processing, forming the input for the AI-based waste segregation and returning output prediction.

6) PIR Sensor (Object Detection): A PIR (Passive Infrared) Sensor is integrated to detect the presence of waste as a user approaches or attempts to deposit an item. This sensor acts as an initial trigger, signaling the system to prepare for scanning and segregation.

7) GPD2846A Micro SD TF Card Module MP3 Decoder Amplifier Board 2W & Speaker (User Alerts): A Speaker driven by a GPD2846A Micro SD TF Card Module MP3 Decoder Amplifier Board is integrated to provide audio alerts to the user. This system communicates the status of the compartment (e.g., "Compartment full") and alerts users if their waste cannot be accepted, serving as a direct feedback mechanism.

8) RFM95W LoRa Modules (Host & Node for Communication): RFM95W LoRa Modules are utilized for long-range, low-power wireless communication [28]. One module acts as the Node within the smart bin to send the prediction result (likely along with fill level and GPS data) to a Host LoRa module. This Host module then receives data through LoRa and transfers it to an ESP32 [29], which further relays the data for display and monitoring on a computer. This ensures reliable data transfer across the campus environment.

9) LED Indicators (Visual Status): LEDs are included to provide visual status indicators of the bin's operation or compartment status, offering an immediate visual cue to users.

10) TensorFlow Lite (On-device AI Inference): The trained AI model was optimized using TensorFlow Lite, enabling efficient, on-device inference directly on the Raspberry Pi for real-time waste classification without requiring constant cloud connectivity [30].

The operational workflow of the smart waste bin begins when the Passive Infrared (PIR) sensor detects motion, signalling that a user is approaching to deposit an item. In response, the camera module captures an image of the object, which is then processed by the TensorFlow Lite model running on the Raspberry Pi to classify the waste into predefined categories. Based on the classification result, the servo motor activates to adjust the segregation platform, guiding the object into the appropriate compartment. After disposal, the ultrasonic sensors scan each compartment to update fill-level status, ensuring that the system can detect and prevent overflow conditions. Simultaneously, the LoRa communication module transmits the bin’s operational data—including system status, classification results, and real-time GPS coordinates—to the central monitoring unit. Finally, the system provides immediate user feedback through both audio prompts and LED indicators, communicating the bin’s status and guiding proper usage.

b. System Assembly and Integration

Following the successful testing of individual hardware components This phase serves as a critical milestone in transitioning from component-level experimentation to a complete, real-world implementation. The success of the system heavily relies on the harmonious integration of sensors, actuators, and intelligent processing units. By leveraging edge computing through the Raspberry Pi, the system performs real-time waste classification without relying on external servers or internet connectivity, enhancing both reliability and privacy [31]. Furthermore, integrating LoRa communication enables long-range, low-power data transmission, making the system highly suitable for decentralized campus environments [32]. The architectural design was also guided by sustainability and modularity principles, ensuring that each component could be easily replaced, upgraded, or repurposed as system requirements evolve.

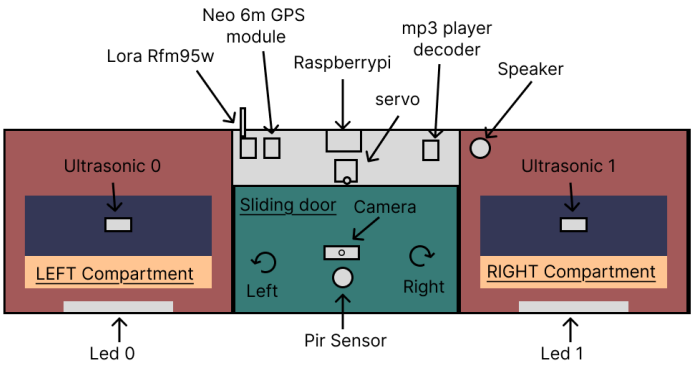

Figure 4. Internal Layout and Component Placement of the Smart Waste Bin

The assembly process followed a structured and iterative approach, beginning with the secure mounting of hardware components inside the waste bin frame. Careful attention was given to the placement arrangement of the module components to avoid interference between modules such as Electro Magnetic Interference (EMI) on LoRa and GPS [33]. Wiring was routed to allow easy maintenance access, and components were fastened using brackets and enclosures to withstand environmental conditions during field deployment. On the software side, multi-threaded programming techniques were implemented to allow simultaneous sensor polling and data processing, minimizing latency and ensuring timely system responses [34]. The final result is a robust, responsive prototype that successfully bridges environmental sensing, artificial intelligence, mechanical actuation, and wireless communication in a compact, scalable unit. The internal layout and component placement within the smart waste bin prototype are depicted in **Figure 4**.

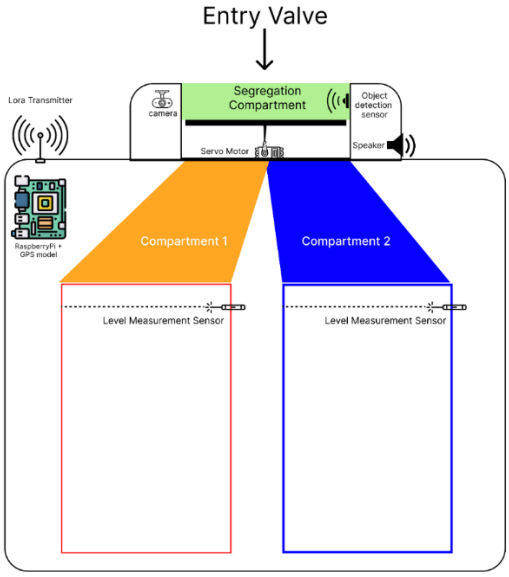

Figure 5. Initial Prototype design of the Smart Waste Bin

Figure 5 illustrates the initial prototype design of the Smart Waste Bin, which features a dual-compartment layout designed for waste segregation. Waste is inserted from the top through a single-entry valve that directs it into a centrally mounted segregation platform. This platform is equipped with a servo motor that enables lateral (left and right) movement, functioning as a sorting mechanism to distribute waste based on classification results. Once the image recognition system identifies the waste category, the servo-driven platform shifts either to the left or right, allowing the waste to drop into the corresponding compartment below. Each compartment designated as Compartment

1 and Compartment 2 is equipped with a level measurement sensor to monitor its fill status. The segregation compartment is also integrated with a camera for image capture, an object detection sensor (PIR) to activate the system upon user approach, and a speaker to provide audio feedback.

3. Result and Discussion

Result

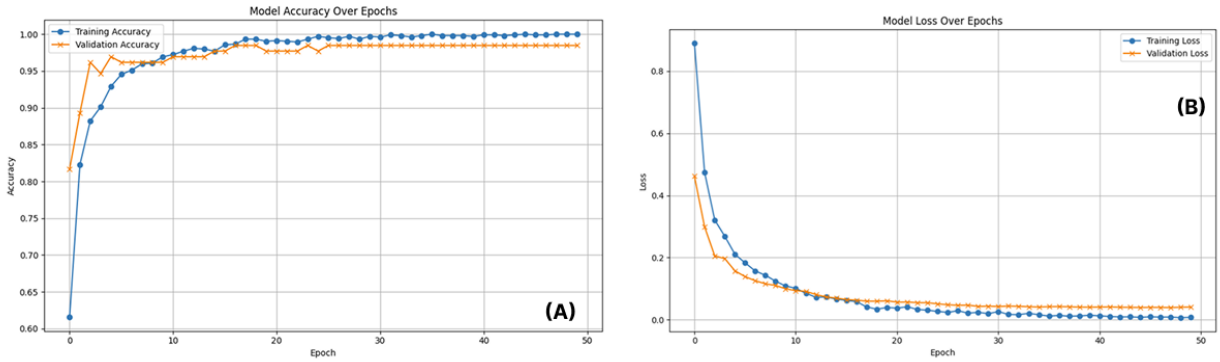

Figure 6. Training Model Performance Plot, (A) Accuracy (B) Loss

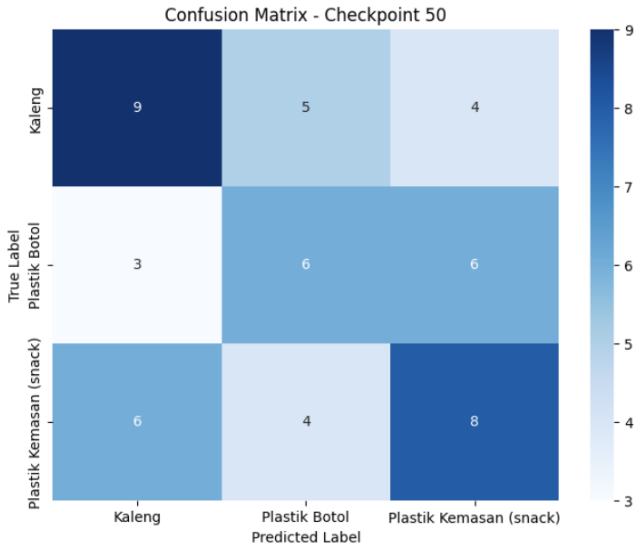

Figure 7. Confusion Matrix Module Validation of Mobile-net V2 Epoch 50

The training process of the MobileNetV2 model achieved high performance, with training accuracy reaching 100% at a loss of 0.00005 and validation accuracy at 98.47% with a loss of 0.0411 (**Figure 6**). The confusion matrix analysis revealed limited performance across all classes, with plastic bottles achieving 40% accuracy, snack packaging 44%, and cans 50% (**Figure 7**, **Table 2**). These results indicate the presence of misclassifications in all categories, reflecting the gap between training performance and validation outcomes.

Table 2. Classification Report

Class	Precision	Recall	F1-Score	Support
Can	0.50	0.50	0.50	18

Class	Precision	Recall	F1-Score	Support
Bottle Plastic	0.40	0.40	0.40	15
Plastic Snack Packaging	0.44	0.44	0.44	18 Accuracy: 0.4510 Weighted F1-Score: 0.4510

In real-time prototype testing, plastic bottles were consistently classified with 100% accuracy across all test scenarios, including intact single, intact multiple, and crumbled conditions. In contrast, plastic snack packaging showed more variability, with accuracies of 53% (intact single), 73% (intact multiple), and 80% (crumbled single), indicating moderate sensitivity to physical item condition. performed the weakest, with accuracy dropping to 40% in both intact multiple and crumbled scenarios, and only 67% in intact single. These results suggest that while the system performs well for clear, consistent objects like plastic bottles, it faces challenges with objects that have greater visual variation, such as snacks and cans. (**Table 3**)

Table 3. Model Testing on Prototype Smart Waste Bin

No	Test Scenario	Qty	Total Trails	Correct Prediction	Accuracy
1	Plastic Bottle (intact)	Single	15	15	100%
2	Plastic Bottle (intact)	Multiple	15	15	100%
3	Plastic Bottle (crumble)	Single	15	15	100%
4	Plastic Snack Packaging (intact)	Single	15	8	53%
5	Plastic Snack Packaging (intact)	Multiple	15	11	73%
6	Plastic Snack Packaging (crumble)	Single	15	12	80%
7	Can Packaging (intact)	Single	15	10	67%
8	Can Packaging (intact)	Multiple	15	6	40%
9	Can Packaging (crumble)	Single	15	6	40%

Prototype testing confirmed that the system was capable of performing the complete classification workflow. The PIR sensor successfully detected user activity and triggered the scanning process. The camera captured images of the object, which were then processed by the TensorFlow Lite model running on the Raspberry Pi. Based on the classification result, the servo motor directed the waste item to the appropriate compartment. Ultrasonic sensors effectively monitored compartment fill levels, and LEDs provided visual feedback of the system's status. Audio alerts communicated system responses, including warnings for full compartments.

Figure 8. Lora Receive Electro Magnetic Frequency Noise

Communication tests showed that the LoRa module achieved stable performance within the range of the campus environment. Data transmission from the smart bin to the monitoring system was generally reliable, though packet loss was observed when the servo motor was active, likely due to electromagnetic interference (**Figure 8**). GPS testing

demonstrated good accuracy in outdoor environments, with position errors typically below 5 meters (**Figure 9**). However, in indoor conditions, GPS performance degraded significantly, with increased errors and frequent signal loss.

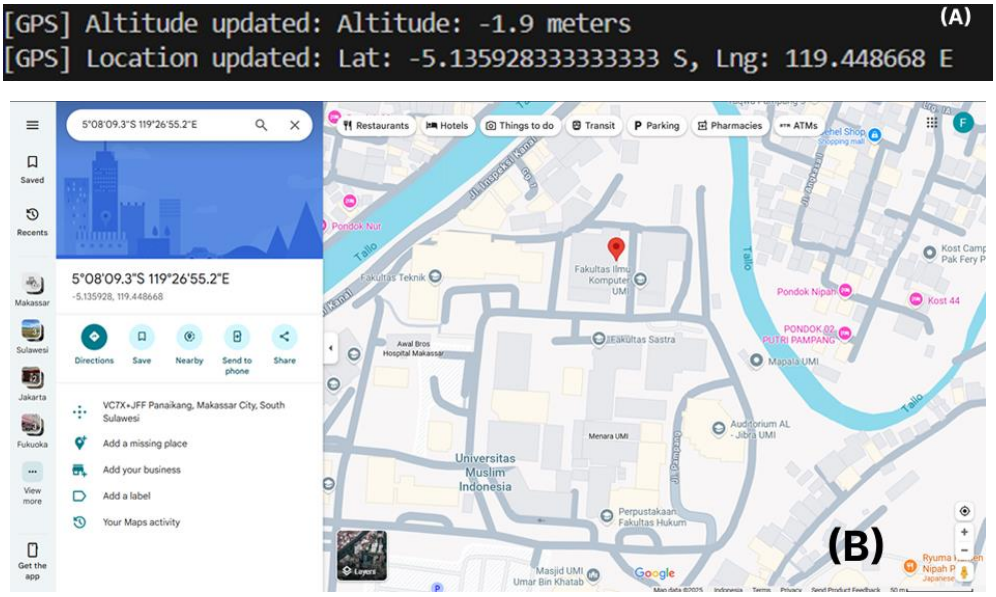

Figure 9. Location Output and Validation Coordinate Using Google Maps

The bin was constructed with dimensions of 40 cm (W) × 1 m (L) × 1.5 m (H), housing two compartments of 34 cm × 50 cm × 60 cm each. The ultrasonic sensor threshold was set at 0.35 m, indicating a usable volume of 42.5 litters per compartment. At this level, the bin holds approximately 1.0–1.5 kg of waste, depending on the item type (plastic bottles, cans, or snack wrappers). The integrated prototype operated as intended, completing the end-to-end workflow within approximately three to five seconds. **Figure 10** included in this study illustrate the prototype design, internal layout, and component placement. confirming the successful integration of hardware components and software control into a functional smart waste bin prototype.

Figure 10. Prototype Smart Waste Bin; A) Segregation platform moving right to left. B) Full Prototype Body. C) LoRa and GPS attached on the side panel. D). Electronic components hide behind the wall cover

Discussion

The results demonstrate both the strengths and limitations of the developed smart waste bin system. The high training and validation accuracy of MobileNetV2 contrasts with its lower real-time testing accuracy, highlighting the persistent challenge of domain shift between controlled datasets and real-world conditions. This observation aligns with previous research that reported similar overfitting tendencies in deep learning models. For instance, ResNet-50 achieved very high training accuracy but showed potential overfitting in plastic waste classification tasks [19], while CNN-based models also reported accuracy above 90% during training but poor generalization on unseen data [20]. These findings parallel the outcomes of this research, where MobileNetV2 proved to be more robust for deployment on resource-constrained devices, striking a balance between accuracy and computational efficiency.

Object characteristics also influenced classification results. Plastic bottles were consistently recognized, likely due to their rigid shape and uniform features. In contrast, snack packaging produced inconsistent outcomes, as deformed, reflective, or overlapping objects were more difficult for the model to classify correctly. Cans yielded the lowest accuracy, with reflective surfaces and lighting conditions contributing to misclassifications. These limitations indicate the need for a more diverse dataset that captures variations in object appearance and environmental conditions (**Table 4**).

Table 4. Test case and Images from the prototype images

Plastic Bottle (intact + Single)	
Plastic Bottle (intact + Multiple)	
Plastic Bottle (Crumble+ Single)	
Plastic Snack Packaging (intact + Single)	

Plastic Snack Packaging (intact + Multiple)	
Plastic Snack Packaging (Crumble+ Single)	
Canned (intact + Single)	
Canned (intact + Mutliple)	
Canned (Crumble+ Single)	

The system's communication and location-tracking capabilities demonstrated practical feasibility for deployment. LoRa provided reliable long-range, low-power data transmission suitable for a campus setting, though electromagnetic interference from the servo occasionally disrupted communication. This issue highlights the importance of improved hardware design or shielding to enhance system stability. Similarly, GPS performed adequately outdoors but was unreliable indoors, a limitation common in satellite-based systems. To overcome this, hybrid localization methods may be explored in future work.

The complete workflow of the smart waste bin, operating within three to five seconds, demonstrates the potential for real-time waste classification and segregation. By integrating sensing, artificial intelligence, and wireless communication into a single system, the prototype supports sustainable waste management practices and aligns with global sustainability goals such as SDG 11 (sustainable cities and communities) and SDG 12 (responsible consumption and production). Nonetheless, improvements are required in model generalization, communication robustness, and localization to enhance the effectiveness and scalability of the system.

4. Conclusion:

This research successfully developed and tested a smart waste bin prototype that integrates artificial intelligence, IoT sensors, and wireless communication to support automated waste segregation. The MobileNetV2 model achieved high training and validation accuracy; however, its performance declined during validation testing, confirming the challenges of overfitting and domain shift. Real-time prototype testing demonstrated strong recognition for plastic bottles, but more variable results for snack packaging and cans, which were influenced by object appearance, lighting, and background contrast.

The system also proved capable of reliable end-to-end operation, with motion detection, classification, sorting, monitoring, and communication processes completed within 3–5 seconds. LoRa provided stable long-range communication in open environments, though packet interference from servo motors was observed, while GPS delivered accurate positioning outdoors but struggled indoors. These findings highlight both the strengths of the system and areas for improvement, particularly in dataset expansion, lighting optimization, EMI shielding, and hybrid localization methods.

Overall, the prototype demonstrates the feasibility of applying AI and IoT technologies for smart waste management in campus environments. With further refinement, the system has the potential to be scaled and adapted for broader implementation, contributing to sustainable urban practices and supporting global sustainability goals such as SDG 11 (Sustainable Cities and Communities) and SDG 12 (Responsible Consumption and Production).

5. Acknowledgments:

The author would like to express sincere gratitude to the Faculty of Computer Science, Universitas Muslim Indonesia (FIKOM UMI), for the unwavering support provided throughout the course of this research. This study originated from the Spring Semester 2024 Student Exchange Program between FIKOM UMI and Kyushu Institute of Technology (KYUTECH), Fukuoka, Japan, which laid the foundation for the initial development and implementation of the system. The project was further refined and enhanced at ICLabs, FIKOM UMI, with strong guidance and supportive research facilities. Special thanks are also extended to the academic staff, the head of the Computer Science Laboratory at Universitas Muslim Indonesia, and the head of the Department of Intelligence and Control Systems Laboratory at KYUTECH, for their valuable assistance, facilities, and meaningful collaboration that contributed significantly to the success of this research

References:

[1] O. Eka, C. Regina, A. Rasha, S. Agnes, S. Nur, and A. Nuraisyah, “Waste Bank in Indonesia: Problem and Opportunities,” 2023, pp. 284–290. doi: 10.2991/978-94-6463-144-9_27.

[2] Yefta. A. K. N. S. N. Jony. O. H. Lanita Winata, “A Model of Waste Management Improvement in Indonesia,” *Jurnal Akuntansi*, vol. 23, no. 3, p. 393, Jan. 2020, doi: 10.24912/ja.v23i3.604.

[3] M. Helmy and D. Trisyanti, “Editorial Team Ministry of Environment and Forestry, Republic of Indonesia (KLHK): (Rosa Vivien Ratnawati, Novrizal Tahar, Ujang Solihin Sidik) IGES Centre Collaborating with UNEP on Environmental Technologies (CCET): (Kazunobu Onogawa, Premakumara Jagath Dickella Gamaralalage, Tsukiji Makoto) Sustainable Waste Indonesia (SWI): (Citation Ministry of Environment and Forestry (2020): National Plastic Waste Reduction Strategic Actions for Indonesia, Republic of Indonesia.”

[4] S. Supangkat and H. Herdiansyah, “Analysis Correlation of Municipal Solid Waste Generation and Population: Environmental Perspective,” in *IOP Conference Series: Earth and Environmental Science*, Institute of Physics Publishing, Jul. 2020. doi: 10.1088/1755-1315/519/1/012056.

[5] F. Cahya Alam *et al.*, "A Model of Sustainable Waste Management Based on Climate Village Program in Pasaran Island, Lampung Province, Indonesia," *Jurnal Pengelolaan Sumberdaya Alam dan Lingkungan*, vol. 15, no. 2, pp. 300–312, 2025, doi: 10.29244/jpsl.15.2.300.

[6] F. Lavigne *et al.*, "The 21 February 2005, catastrophic waste avalanche at Leuwigajah dumpsite, Bandung, Indonesia," *Geoenvironmental Disasters*, vol. 1, no. 1, Dec. 2014, doi: 10.1186/s40677-014-0010-5.

[7] "The World Bank Improvement of Solid Waste Management to Support Regional and Metropolitan Cities (P157245)."

[8] T. Sipola, J. Alatalo, T. Kokkonen, and M. Rantonen, "Artificial Intelligence in the IoT Era: A Review of Edge AI Hardware and Software," in *2022 31st Conference of Open Innovations Association (FRUCT)*, IEEE, Apr. 2022, pp. 320–331. doi: 10.23919/FRUCT54823.2022.9770931.

[9] R. Tosepu, S. Z. A. Nazar, and N. Yuniar, "The Internet of Things (IoT) is being used to Control the Implementation of Water, Sanitation, and Hygiene (WaSH) Practices during the COVID-19 Era in Indonesia," *WSEAS Transactions on Computer Research*, vol. 11, pp. 376–384, 2023, doi: 10.37394/232018.2023.11.34.

[10] D. Indra, F. Umar, F. Fattah, H. Azis, and A. Rachman Manga, *The Spirit of Recovery: IT Perspectives,Experiences, and Applications during the COVID-19 Pandemic*. CRC Press, 2024. doi: https://doi.org/10.1201/9781003331674.

[11] T. Kadus, P. Nirmal, and K. Kulkarni, "Smart Waste Management System using IOT," *International Journal of Engineering Research & Technology (IJERT)*, vol. 9, 2020, doi: 10.17577/IJERTV9IS040490.

[12] A. Z. Azmi, N. M. Sahar, and M. T. Islam, "Smart Waste Management System Using Lora Technology," in *E3S Web of Conferences*, EDP Sciences, Jan. 2025. doi: 10.1051/e3sconf/202459904007.

[13] S. Vishnu *et al.*, "IoT-enabled solid waste management in smart cities," *Smart Cities*, vol. 4, no. 3, pp. 1004–1017, Sep. 2021, doi: 10.3390/smartcities4030053.

[14] S. Dubey, P. Singh, P. Yadav, and K. K. Singh, "Household Waste Management System Using IoT and Machine Learning," in *Procedia Computer Science*, Elsevier B.V., 2020, pp. 1950–1959. doi: 10.1016/j.procs.2020.03.222.

[15] E. Longo, F. A. Sahin, A. E. C. Redondi, P. Bolzan, M. Bianchini, and S. Maffei, "A 5g-enabled smart waste management system for university campus," *Sensors*, vol. 21, no. 24, Dec. 2021, doi: 10.3390/s21248278.

[16] Md. M. Islam, S. Nooruddin, F. Karray, and G. Muhammad, "Internet of Things: Device Capabilities, Architectures, Protocols, and Smart Applications in Healthcare Domain," *IEEE Internet Things J*, vol. 10, no. 4, pp. 3611–3641, Feb. 2023, doi: 10.1109/JIOT.2022.3228795.

[17] M. K. Hasan, M. A. Khan, G. F. Issa, A. Atta, A. S. Akram, and M. Hassan, "Smart Waste Management and Classification System for Smart Cities using Deep Learning," in *2022 International Conference on Business Analytics for Technology and Security, ICBATS 2022*, Institute of Electrical and Electronics Engineers Inc., 2022. doi: 10.1109/ICBATS54253.2022.9759087.

[18] H. Kusumah, M. R. Nurholik, C. P. Riani, and I. R. Nur Rahman, "Deep Learning for Pothole Detection on Indonesian Roadways," *Journal Sensi*, vol. 9, no. 2, pp. 175–186, Aug. 2023, doi: 10.33050/sensi.v9i2.2911.

[19] H. Briouya, A. Briouya, and A. Choukri, "Surveying Lightweight Neural Network Architectures for Enhanced Mobile Performance," 2024, pp. 187–199. doi: 10.1007/978-3-031-77043-2_15.

[20] Q. Xia and X. Bai, "Intelligent garbage sorting system based on MobileNetV2," in *7th International Symposium on Advances in Electrical, Electronics, and Computer Engineering*, T. Zhang, Ed., SPIE, Oct. 2022, p. 53. doi: 10.1117/12.2639707.

[21] A. N. Bakti and N. H. Shabrina, "Plastic Waste Identification using ResNet-50: A Deep Learning Approach," *Rekayasa*, vol. 17, no. 3, pp. 380–386, Dec. 2024, doi: 10.21107/rekayasa.v17i3.26456.

[22] Y. Rayhan and A. Pratama Rifai, "Multi-class Waste Classification Using Convolutional Neural Network," *Applied Environmental Research*, Jun. 2024, doi: 10.35762/AER.2024021.

[23] H. Sun, S. Zhang, R. Ren, and L. Su, "Maturity Classification of 'Hupingzao' Jujubes with an Imbalanced Dataset Based on Improved MobileNet V2," *Agriculture*, vol. 12, no. 9, p. 1305, Aug. 2022, doi: 10.3390/agriculture12091305.

[24] M. Khoiruddin and S. Tena, "Fruit and Vegetable Classification using Convolutional Neural Network with MobileNetV2," *Journal of Applied Research In Computer Science and Information Systems*, vol. 2, no. 2, pp. 203–210, Dec. 2024, doi: 10.61098/jarcis.v2i2.197.

[25] M. T. R *et al.*, "Transformative Breast Cancer Diagnosis using CNNs with Optimized ReduceLROnPlateau and Early Stopping Enhancements," *International Journal of Computational Intelligence Systems*, vol. 17, no. 1, p. 14, Jan. 2024, doi: 10.1007/s44196-023-00397-1.

[26] D. N. K. Vu, "A Low-Cost Fire Alarm System Using Raspberry Pi," 2025, pp. 355–366. doi: 10.1007/978-981-97-5337-6_30.

[27] J. Lim, J. Joo, and S. C. Kim, "Ultrasonic Based Outdoor Localization Using Threshold Crossing," in *2024 International Conference on Artificial Intelligence in Information and Communication (ICAIIC)*, IEEE, Feb. 2024, pp. 117–119. doi: 10.1109/ICAIIC60209.2024.10463264.

[28] M. Yassir *et al.*, "Performance Analysis of LoRaWAN Communication Utilizing the RFM96 Module," *ILKOM Jurnal Ilmiah*, vol. 16, no. 3, pp. 255–270, Dec. 2024, doi: 10.33096/ilkom.v16i3.2326.255-270.

[29] D. Loukatos, A. Fragkos, G. Kargas, and K. G. Arvanitis, "Implementation and Evaluation of a Low-Cost Measurement Platform over LoRa and Applicability for Soil Monitoring," *Future Internet*, vol. 16, no. 12, p. 443, Nov. 2024, doi: 10.3390/fi16120443.

[30] M. S. A. Zuhair, A. Widiyanto, and S. Nugroho, "Comparison of tensorflow and tensorflow lite for object detection on Raspberry Pi 4," 2023, p. 020129. doi: 10.1063/5.0120245.

[31] A. H. M. Alaidi, Z. A. Ramadhan, J. S. Alrubaye, H. TH. S. ALRikabi, H. A. Mutar, and I. Svyd, "AI-based monkeypox detection model using Raspberry Pi 5 AI Kit," *Sustainable Engineering and Innovation*, vol. 7, no. 1, pp. 1–14, Jan. 2025, doi: 10.37868/sei.v7i1.id393.

[32] F. Zhang *et al.*, "Exploring LoRa for Long-range Through-wall Sensing," *Proc ACM Interact Mob Wearable Ubiquitous Technol*, vol. 4, no. 2, pp. 1–27, Jun. 2020, doi: 10.1145/3397326.

[33] A. N. De São José, V. Deniau, C. Gransart, T. Vantroys, A. Boé, and E. P. Simon, "Susceptibility of LoRa Communications to Intentional Electromagnetic Interference with Different Sweep Periods," *Sensors*, vol. 22, no. 13, Jul. 2022, doi: 10.3390/s22135015.

[34] M. Y. Iqbal Basheer, A. M. Ali, N. H. Abdul Hamid, M. A. Mohd Ariffin, R. Osman, and S. Nordin, "Detecting Anomaly in IoT Devices using Multi-Threaded Autonomous Anomaly Detection," in *2021 4th International Symposium on Agents, Multi-Agent Systems and Robotics (ISAMSR)*, IEEE, Sep. 2021, pp. 111–118. doi: 10.1109/ISAMSR53229.2021.9567894.